ITEMS INCLUDED IN EACH BAGS

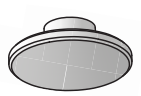

Knob

Single	22" Mount	38" Mount	54" Mount
1x	3x	5x	7x

Hook

Single	22" Mount	38" Mount	54" Mount
1x	3x	5x	7x

1.25" Threaded Rod For Multi Hooks

22" Mount	38" Mount	54" Mount
3x	5x	7x

2" Threaded Rod For Single Hook

Single
1x

Toggle with Machine Screw
*use when installing on hollow halls.

Single	22" Mount	38" Mount	54" Mount
1x	2x	3x	4x

Wood Screw
*use when installing on solid surfaces or direct to stud.

Single	22" Mount	38" Mount	54" Mount
	2x	3x	4x

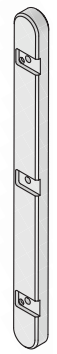

22" Wall Mount Rail 1x

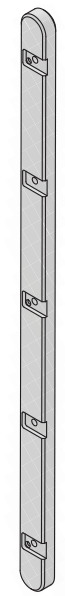

38" Wall Mount Rail 1x

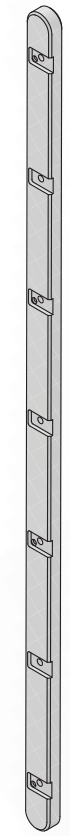

54" Wall Mount Rail 1x

ASSEMBLY TIPS: 5 Important Points You **NEED** to Read

1. Prior to beginning assembly, please inspect and inventory the parts to make sure you have everything and that nothing was damaged during shipping. If damage has occurred, please take photos and go to lolldesigns.com/damage. Rest assured we'll get it taken care of straight away!
2. To avoid scratching furniture, assemble on a clean, soft surface like a blanket, carpet, or the flattened cardboard box the furniture was shipped in.
3. **Start all bolts by hand to ensure proper alignment and to prevent cross threading.** Then using the provided tool, tighten until you feel resistance. Do not overtighten.
4. Bolts should not be forced, but some components, particularly blocks, fit snug but can still be installed without tools or excess force.
5. If parts are still not going together, please send us a photo of the part you are having trouble with.

"Loll Designs inspires people to appreciate the outdoors."
Greg Benson - Founder

♻ RECYCLE THE PACKAGING

We've gone through great lengths to make as much of our packaging as possible recyclable. The cardboard box, paper wrap, filler and paper bags can all go in your recycling bin. The muslin hardware bags replaced plastic bags with the intention of reducing plastic and encouraging reuse. Loll Designs and Planet Earth thank you!

WE WANT YOU TO LOVE YOUR LOLL

For more info and visual aids, watch the assembly videos at www.lolldesigns.com/videos
For product care & maintenance, visit www.lolldesigns.com/care-maintenance
For further **loll**ygagging assistance, please reach out!

+1 877-740-3387
sales@lolldesigns.com

5912 Waseca Street
Duluth, Minnesota 55807

MADE IN THE USA · CERTIFIED cradletocradle · be ORIGINAL Member · 1% FOR THE PLANET MEMBER #610 · it's good to be recycled

ASSEMBLY INSTRUCTIONS & PRODUCT INFO: STANDBY WALL TOGGLE INSTALLATION

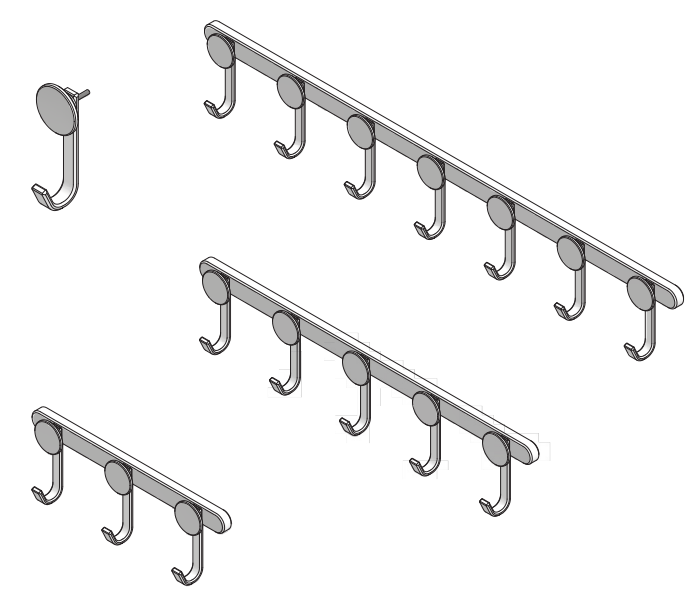

loll DESIGNS

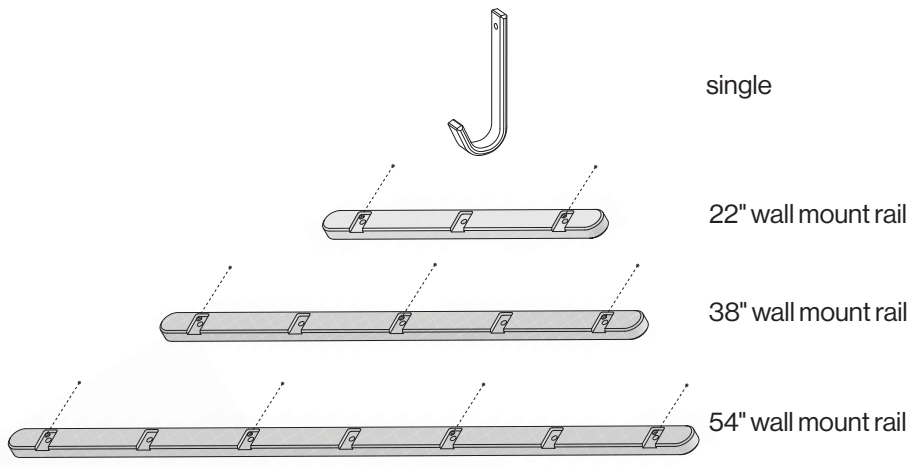

1. Mark hole locations on wall, make sure you are marking the hole that is in the top left of the hole section. Be sure to use a level.

Showing Instructions for the toggle with machine screw, to use on hollow walls

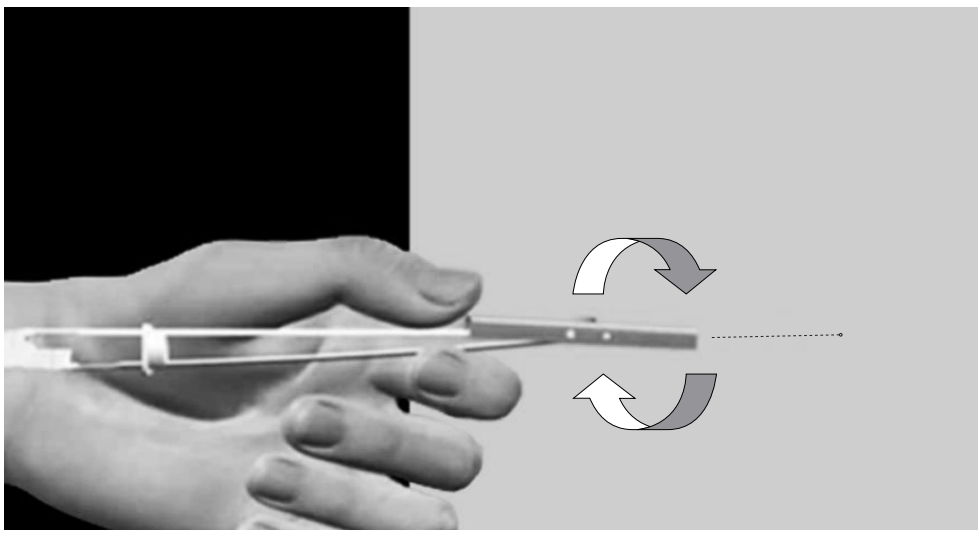

2. Use a drill with 1/2 inch diameter bit to create the hole.

**Optional method for toggles with a pointed tip: Hold metal channel flat against the plastic straps. Use pointed tip of metal channel to puncture wall, push forward and rotate left and right to hand drill hole into wall*

*** If installing on anything other than sheetrock you must use drill method for creating mounting holes.*

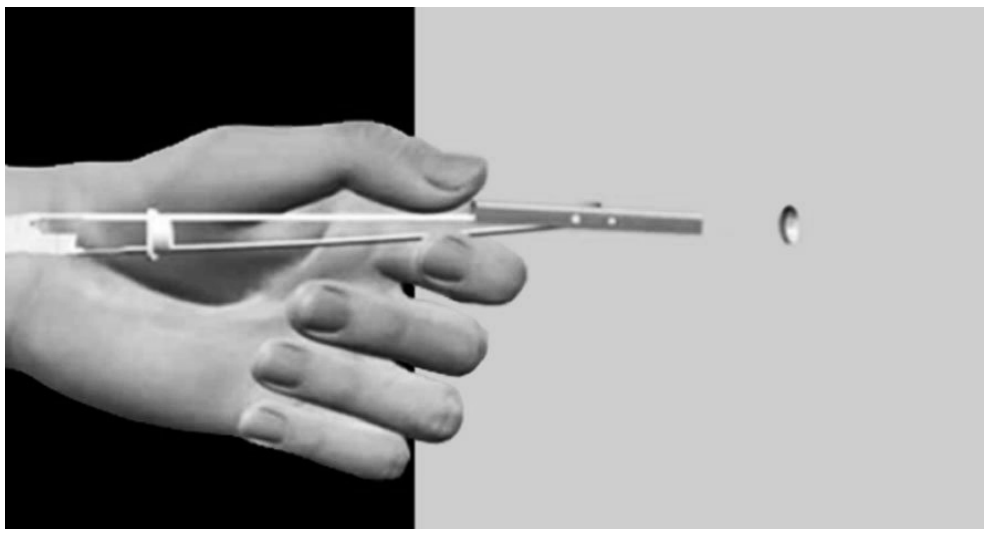

3. Hold metal channel flat against the plastic straps and slide the channel through the hole.

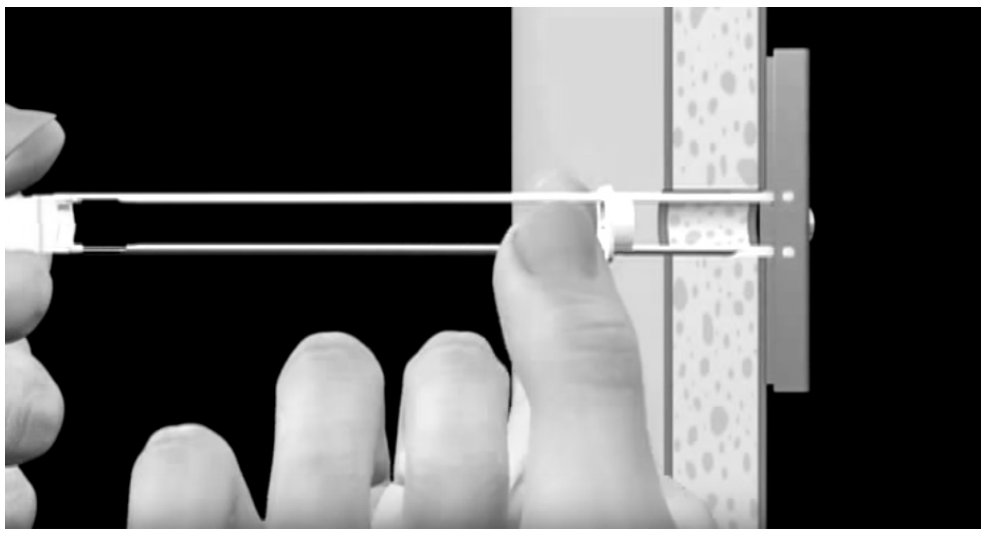

4. Pull plastic straps toward you until the channel rests behind the wall. Slide the cap down the straps until the cap's flange is flush with the wall.

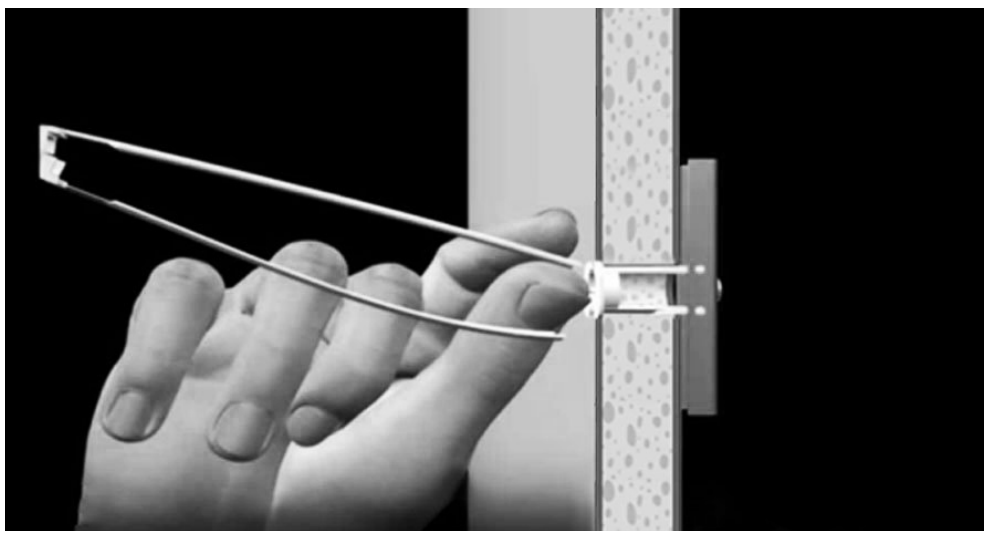

5. Place your thumb between the straps at the wall and push your thumb side to side, snapping off the straps level with the cap.
- Repeat for steps 2-5 for other holes.

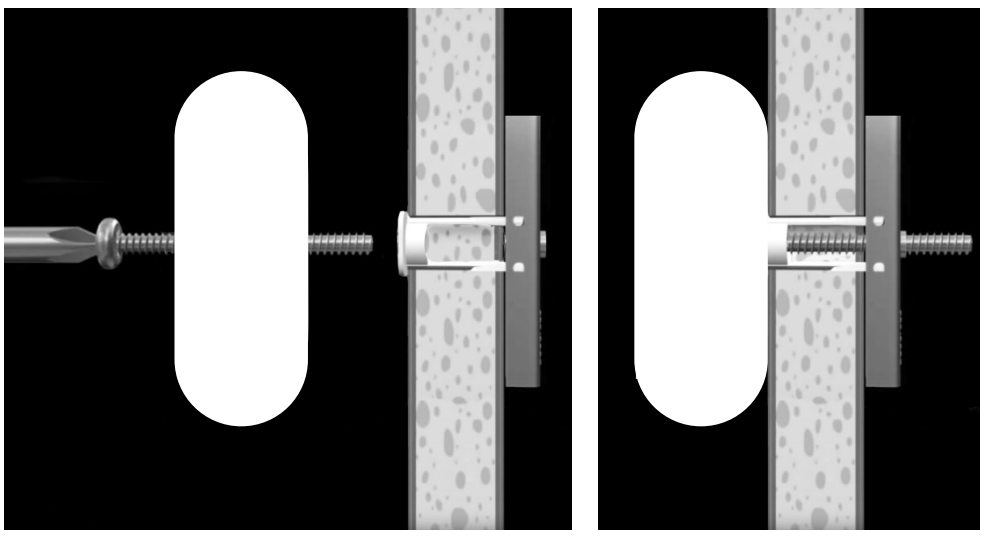

6. Insert provided machine screw through the mounting board and thread into the channel and tighten securely using screwdriver.

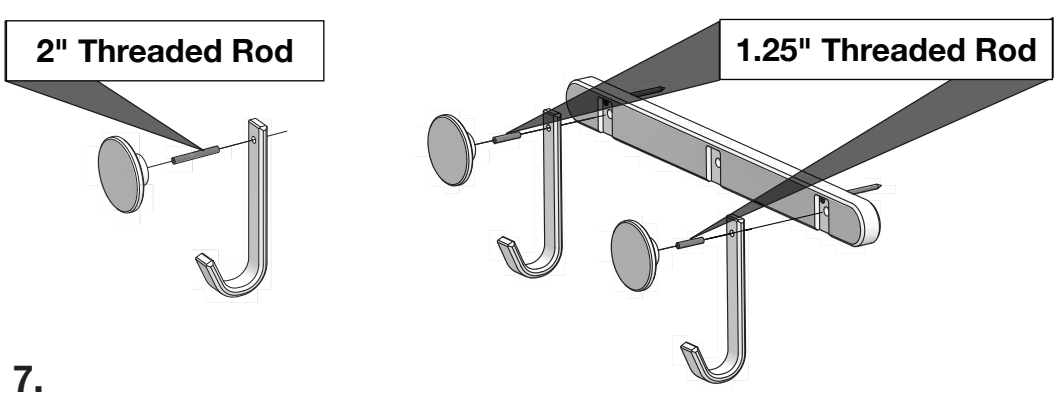

7.

Once all the toggles are placed you can place the hook, the threaded rod and Brodie and thread until tight into all the holes on the wall mount rail.
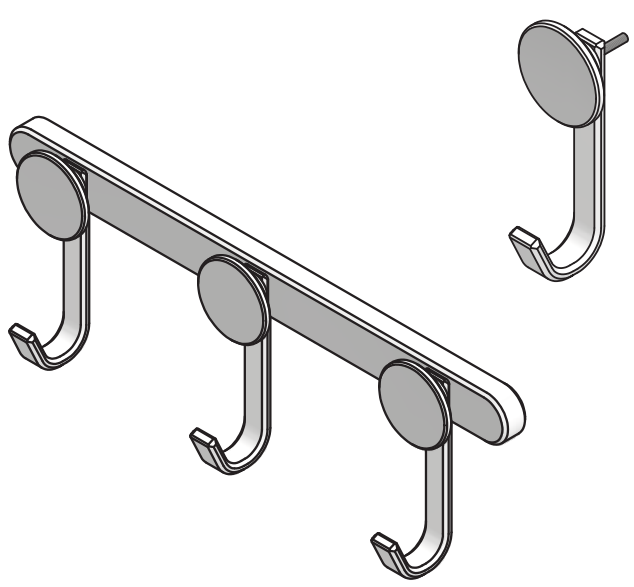
**showing the standby single and 22" wall mount rail*