INCLUDED PARTS

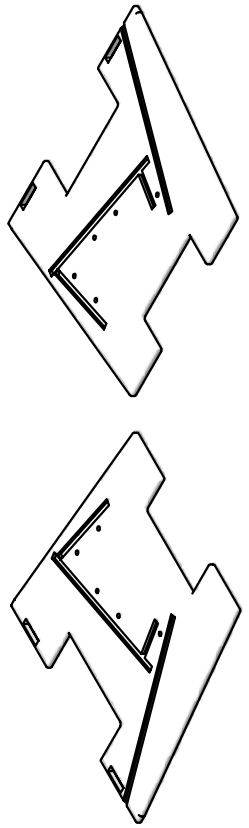

P1R 1x

P1L 1x

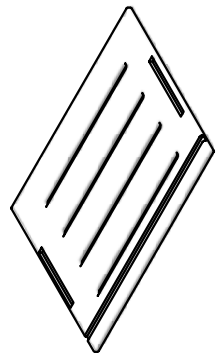

P4 1x

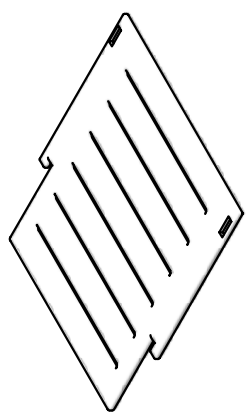

P2 1x

P6 1x

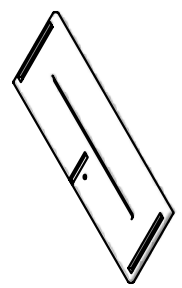

P5 1x

P3 1x

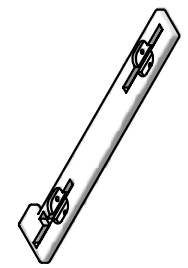

P7L 1x

P7R 1x

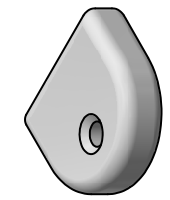

GB 4x

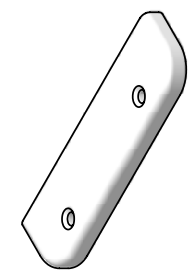

BB 4x

1" 12x

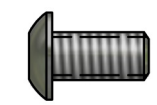

1/2" 8x

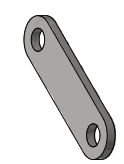

DMB 4x

Bolts shown actual size.
*** Please double check the bolt size required on each step.
Use of wrong bolts will result in damage of product.***

ASSEMBLY TIPS: 5 Important Points You **NEED** to Read

1. Prior to beginning assembly, please inspect and inventory the parts to make sure you have everything and that nothing was damaged during shipping. If damage has occurred, please take photos and go to lolldesigns.com/damage. Rest assured we'll get it taken care of straight away!
2. To avoid scratching furniture, assemble on a clean, soft surface like a blanket, carpet, or the flattened cardboard box the furniture was shipped in.
3. **Start all bolts by hand to ensure proper alignment and to prevent cross threading.** Then using the provided tool, tighten until you feel resistance. Do not overtighten.
4. Bolts should not be forced, but some components, particularly blocks, fit snug but can still be installed without tools or excess force.
5. If parts are still not going together, please send us a photo of the part you are having trouble with.

BLOCK & BOLT INSTALLATION

Insert bolts through countersunk hole side of blocks as shown below.

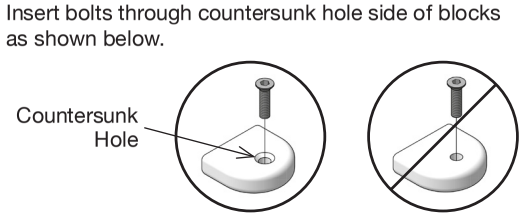

"Loll Designs inspires people to appreciate the outdoors."
Greg Benson - Founder

RECYCLE THE PACKAGING

We've gone through great lengths to make as much of our packaging as possible recyclable. The cardboard box, paper wrap, filler and paper bags can all go in your recycling bin. The muslin hardware bags replaced plastic bags with the intention of reducing plastic and encouraging reuse. Loll Designs and Planet Earth thank you!

WE WANT YOU TO LOVE YOUR LOLL

For more info and visual aids, watch the assembly videos at www.lolldesigns.com/videos
For product care & maintenance, visit www.lolldesigns.com/care-maintenance
For further **loll**ygagging assistance, please reach out!

+1 877-740-3387
sales@lolldesigns.com

5912 Waseca Street
Duluth, Minnesota 55807

MADE IN THE USA · CERTIFIED cradletocradle · be ORIGINAL Member · 1% FOR THE PLANET MEMBER #610 · it's good to be recycled

ASSEMBLY INSTRUCTIONS & PRODUCT INFO: GO LOUNGE

loll DESIGNS

1

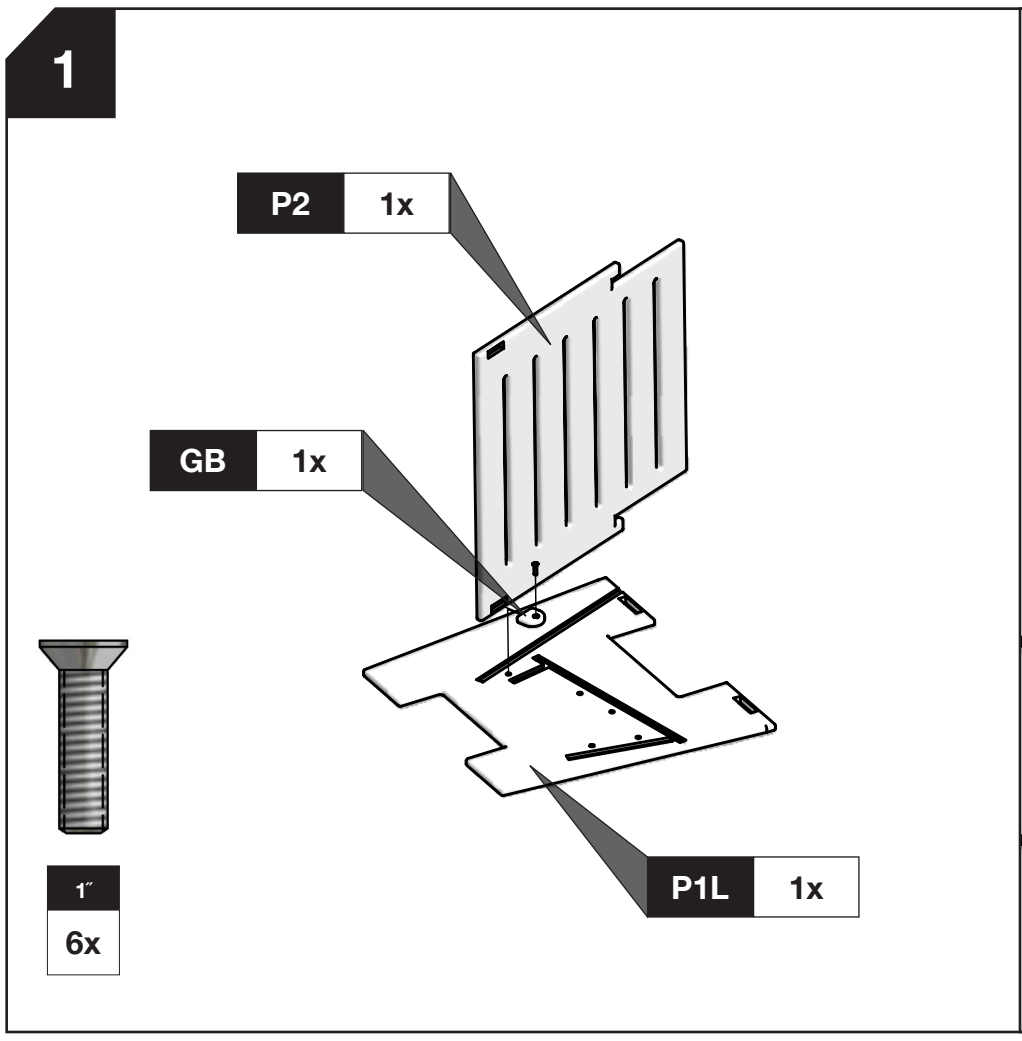

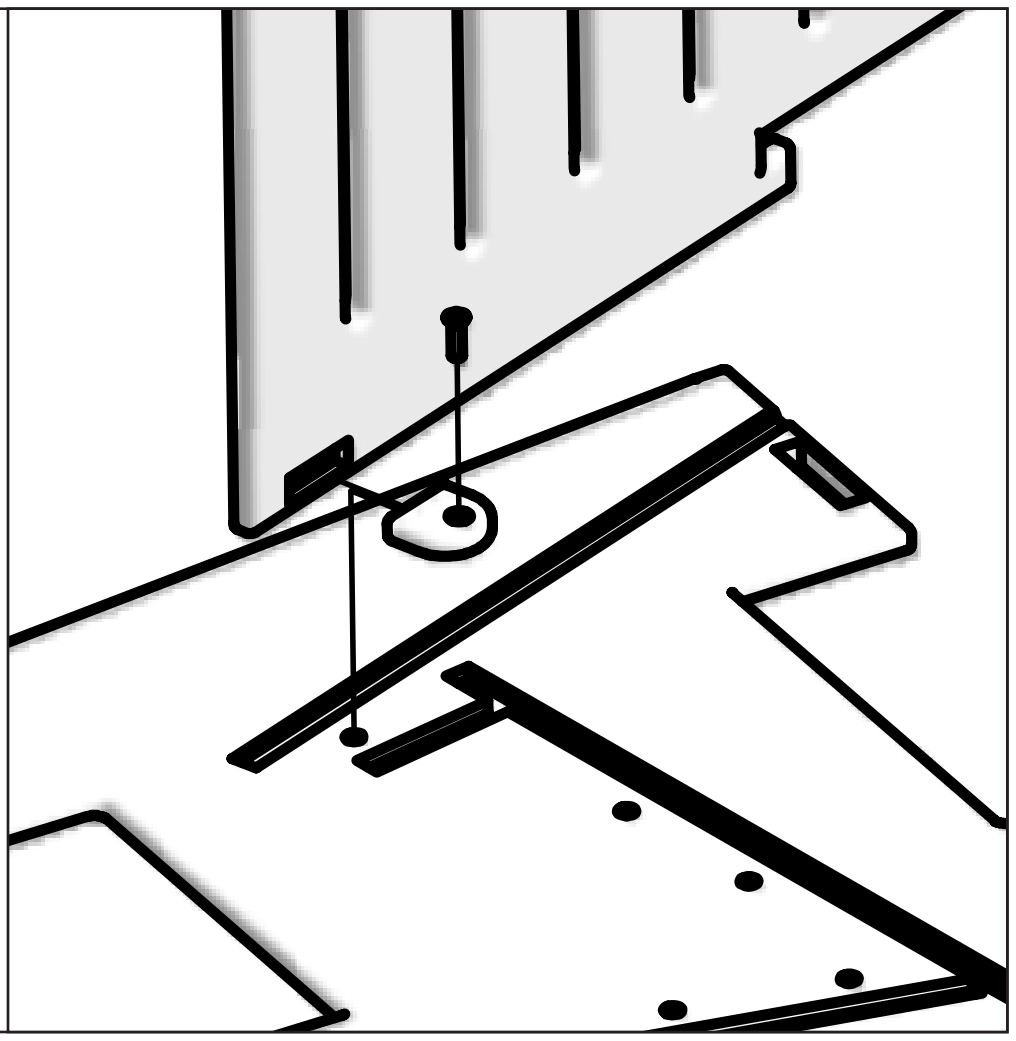

2

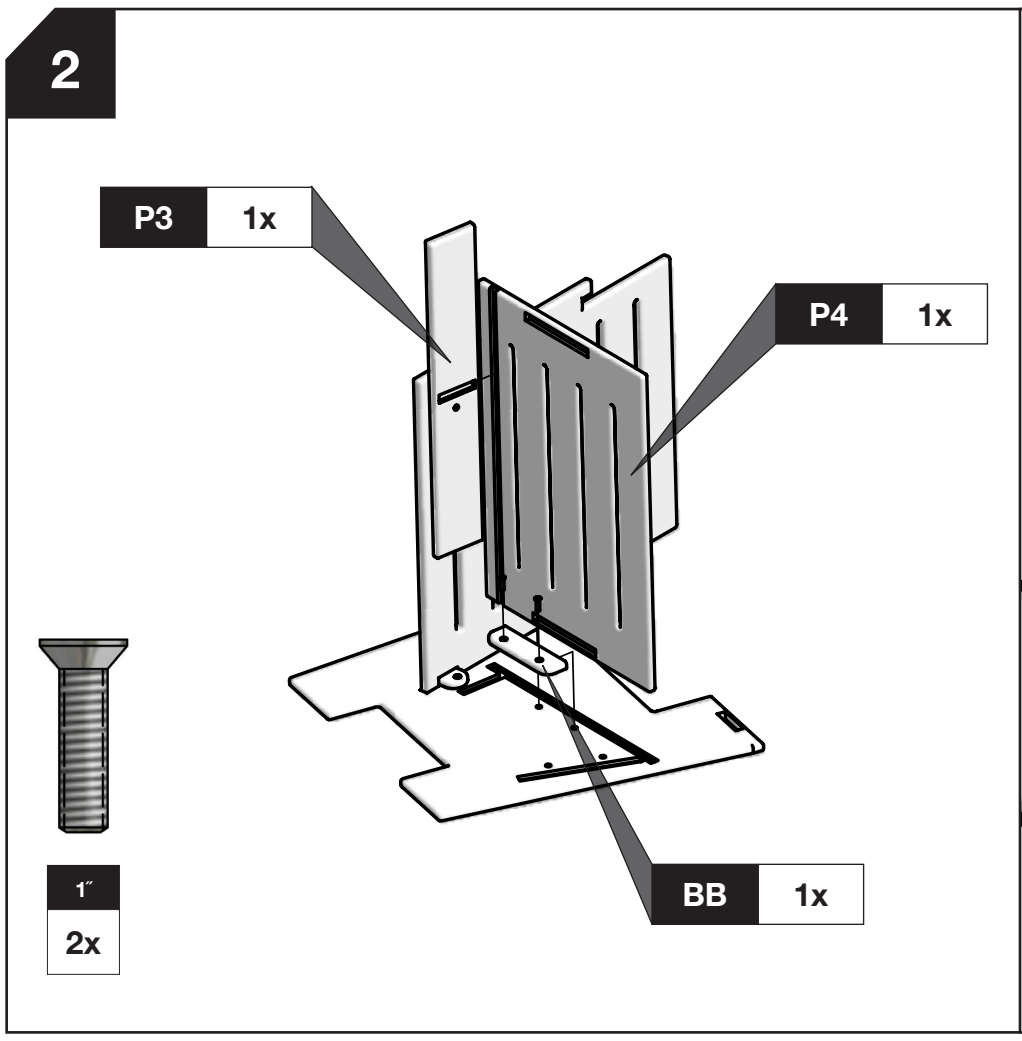

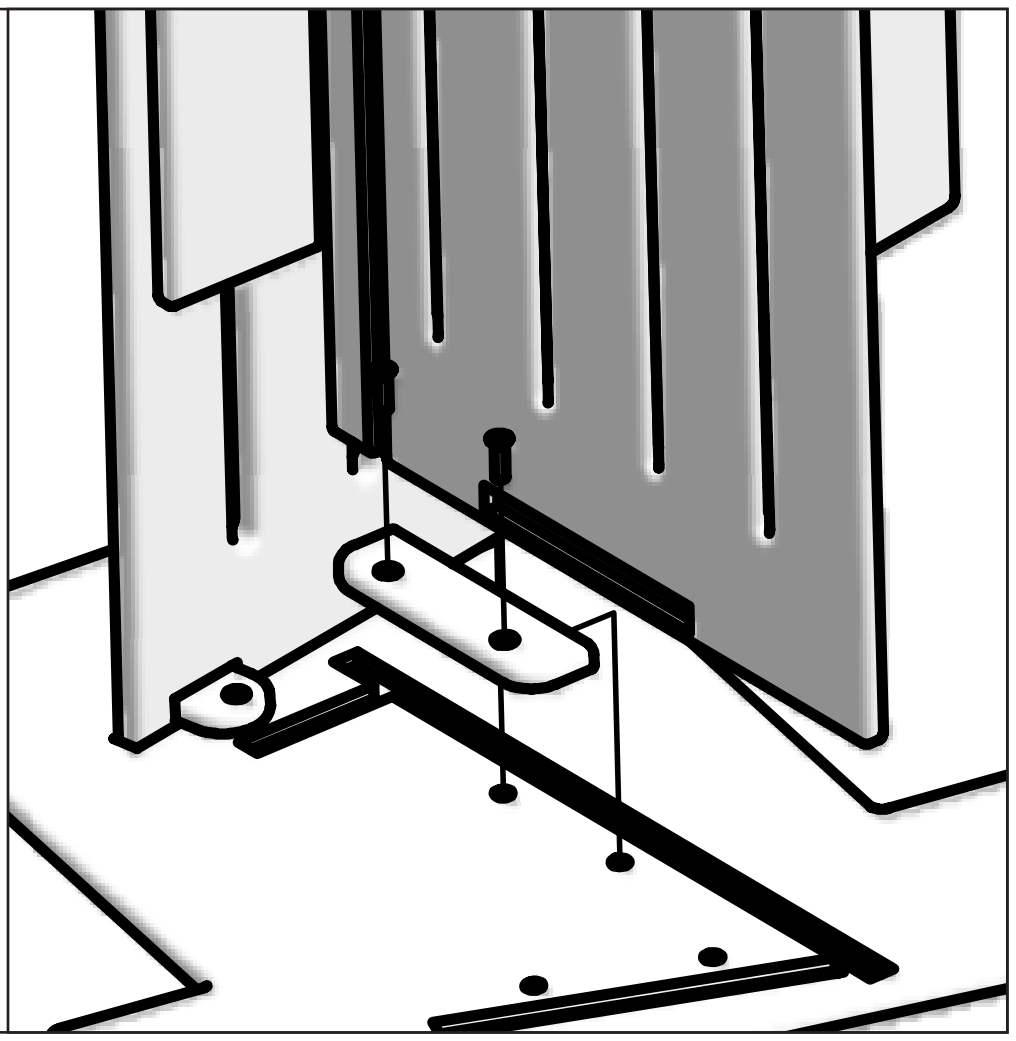

3

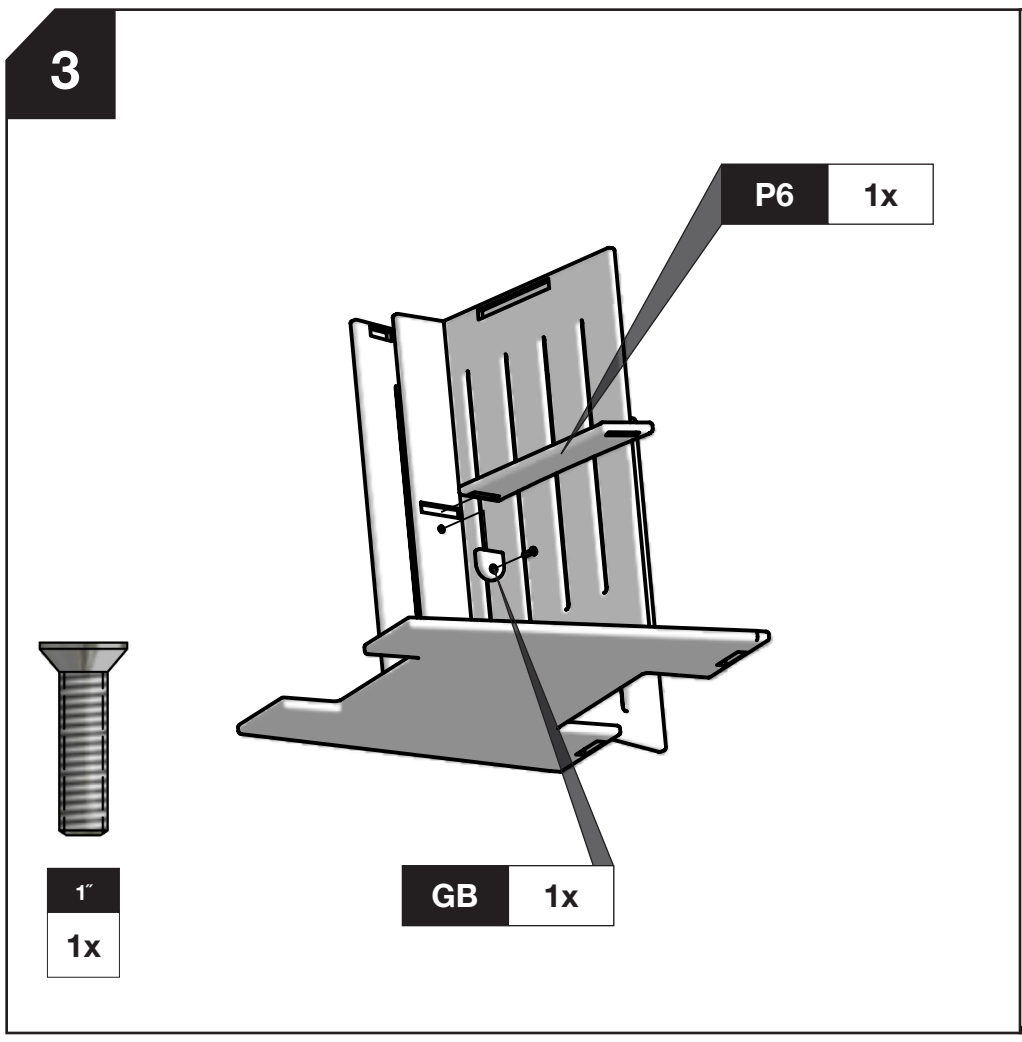

4

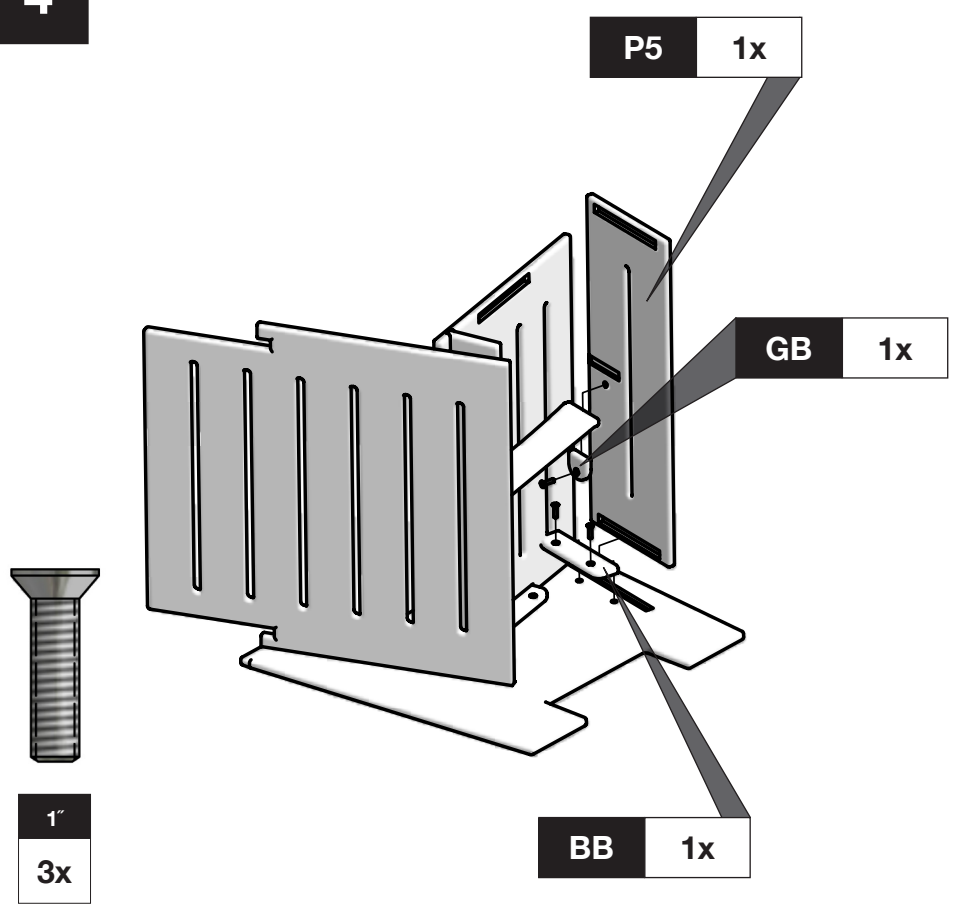

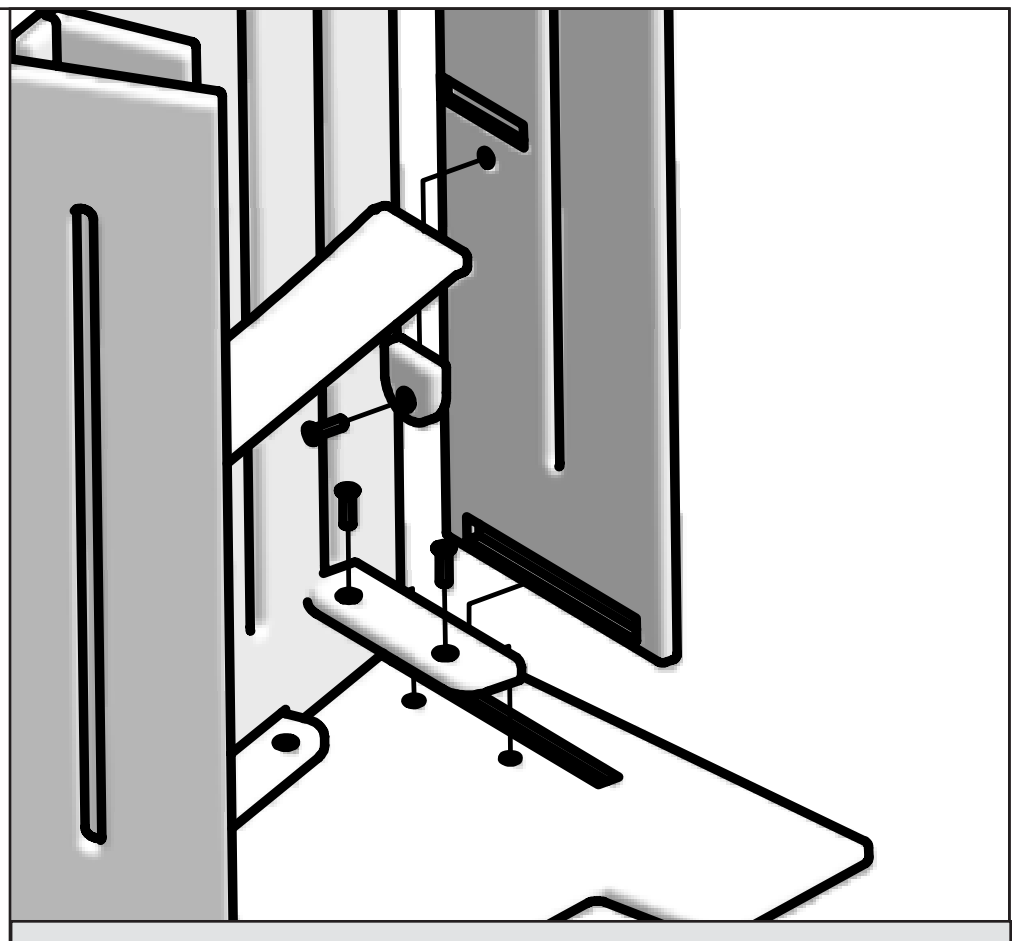

REPEAT STEPS 1,2 AND 4 TO ATTACHED REMAINING P1R

5

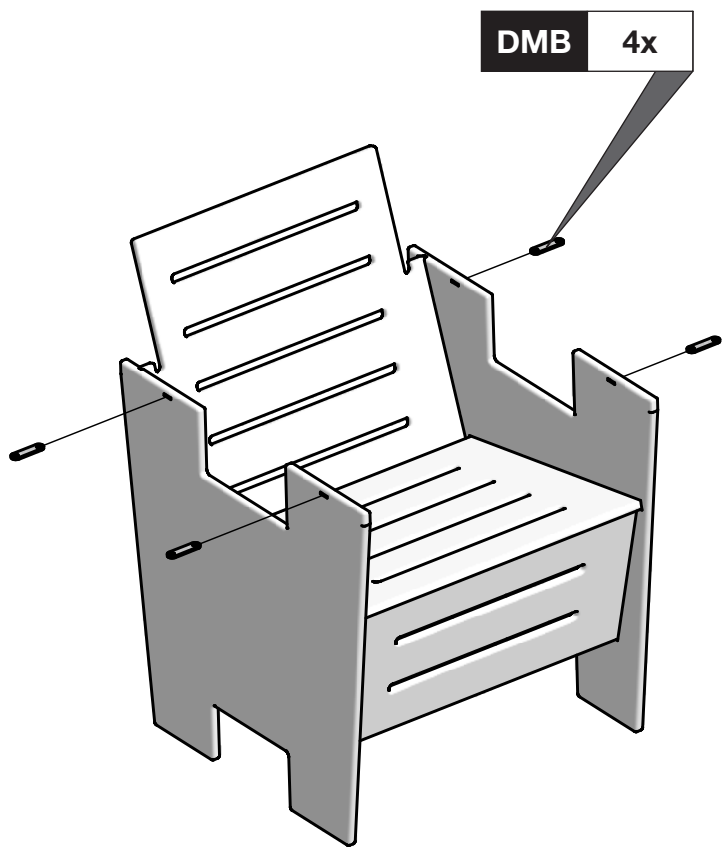

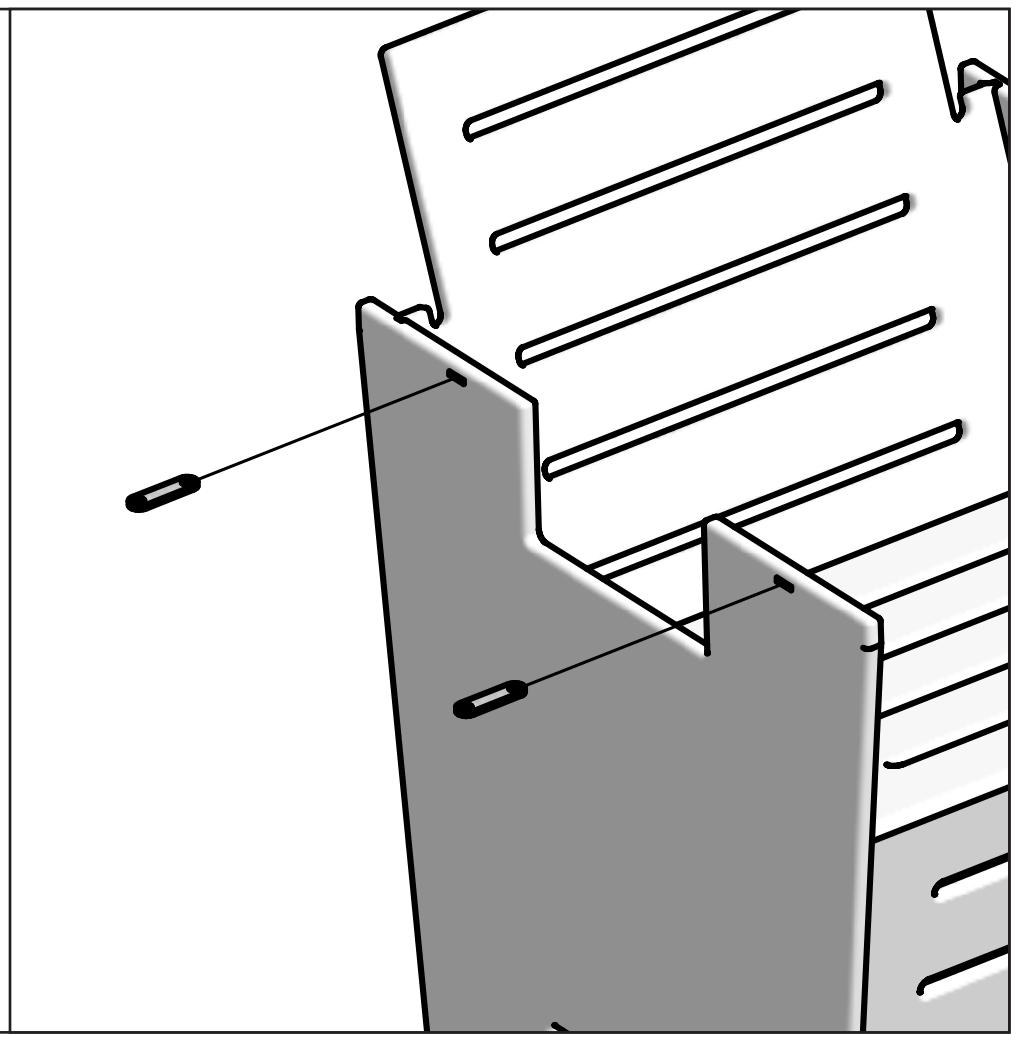

6